coatmaster Inline Data Sheet

	m1	m2	m3	m4
Weight head unit	4.7 kg			
Thickness range	1 - 2000 µm			
Working distance (max.)[ii]	30 cm	50 cm	80 cm	120 cm
Relative standard deviation[i]	3 %	1.5 %	0.7 %	0.3 %
Measurements[iii]	1 million	2 million	4 million	8 million
Repetition rate[iii]	1 Hz (2 Hz opt.)			
Relative velocity of sample[ii]	120 m/min			
Tilt tolerance[ii]	± 70°			
Distance tolerance[ii]	5 - 30 cm	5 - 50 cm	5 - 80 cm	5 - 120 cm
Operating temperature head unit	60°C			
Operating temperature cooling and generator (rack units)	5°C - 35°C			
Relative humidity (non-condensing)	< 80 %			
Height difference between measurement head & rack	8 m			
Ethernet	Yes			
W-Lan	Opt			
External trigger input	Yes			

[i] 60 µm cured powder coating on aluminum substrate, 20 cm working distance, 1000J
[ii] Depending on coating/substrate combination
[iii] Depending on energy settings

coatmaster AG | Flugplatzstrasse 5 | CH-8404 Winterthur | Tel +41 52 2120277 | info@coatmaster.com | www.coatmaster.com

Data, specifications and descriptions in this datasheet are subject to change without notice. Pictures are for illustration purposes only and may differ from the real appearance. ©coatmaster AG reserves all rights.

Dimensions coatmaster head unit

Front view

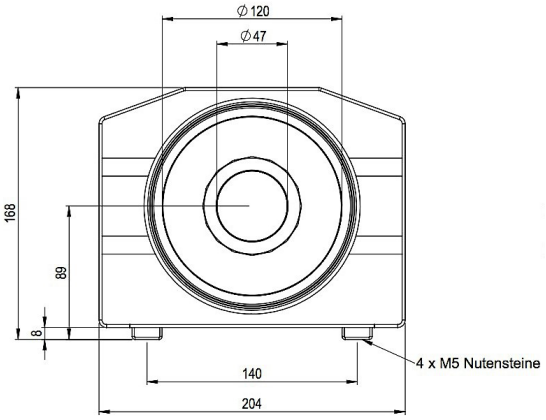

Back view

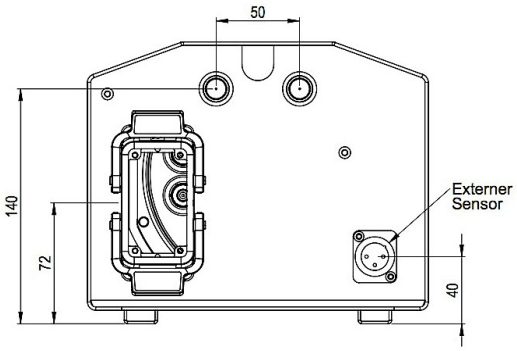

Top view

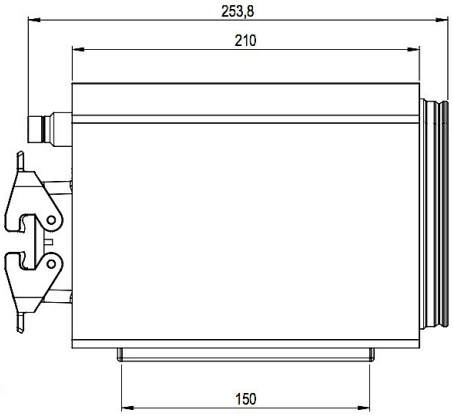

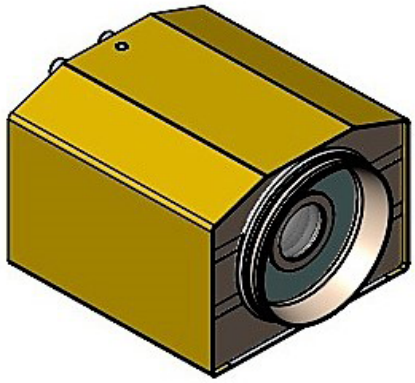

Dimensions coatmaster rack units

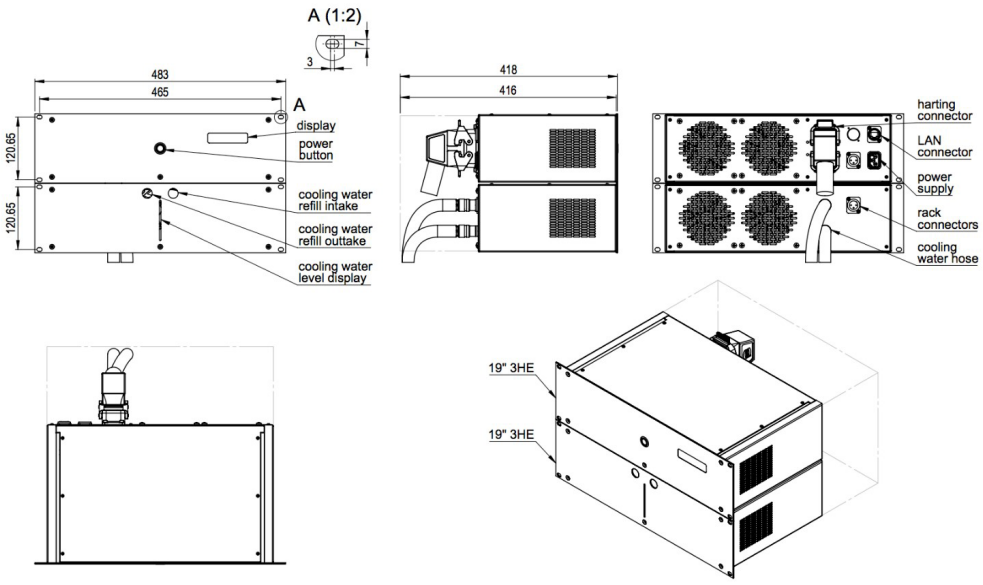

coatmaster AG | Flugplatzstrasse 5 | CH-8404 Winterthur | Tel +41 52 2120277 | info@coatmaster.com | www.coatmaster.com

Data, specifications and descriptions in this datasheet are subject to change without notice. Pictures are for illustration purposes only and may differ from the real appearance. ©coatmaster AG reserves all rights.

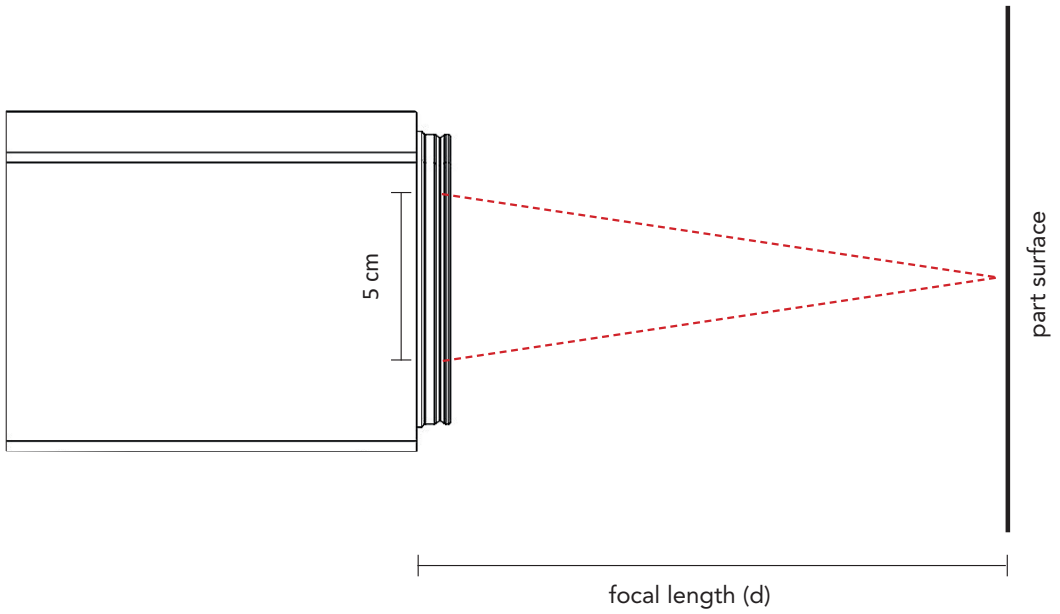

- Focal length (d) available in d: 137 mm, d: 268 mm, d: 373 mm, d: 541 mm
  ∞ : Parallel optics

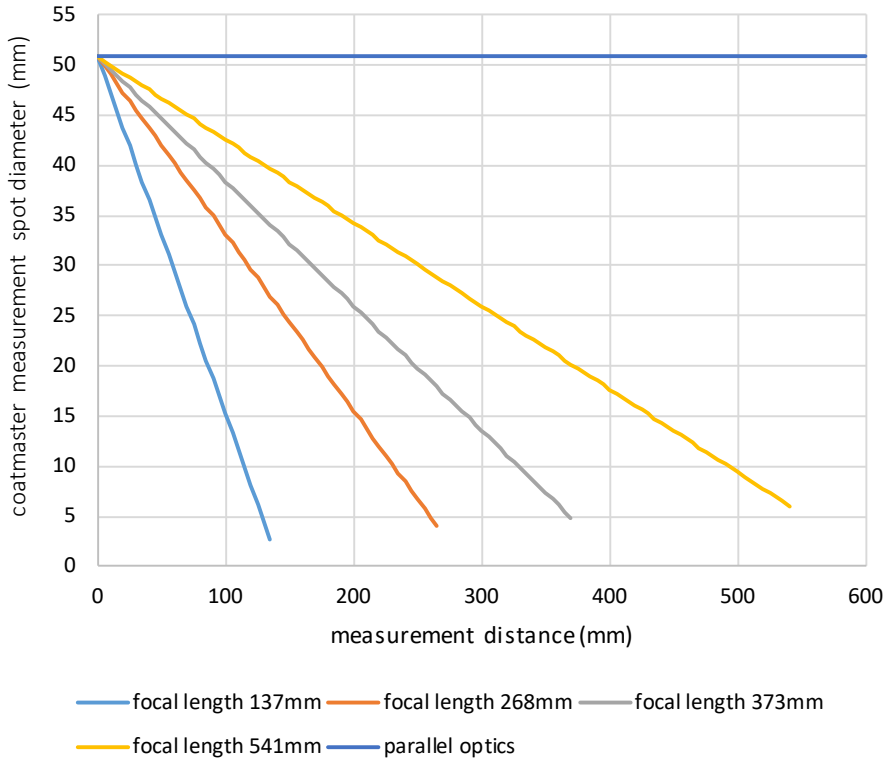

Data, specifications and descriptions in this datasheet are subject to change without notice. Pictures are for illustration purposes only and may differ from the real appearance. ©coatmaster AG reserves all rights.